MT910X

Ratiometric Linear Hall-Effect IC, Analog Output

1 Product Description

The MT910X device is a linear Hall effect IC that responds proportionally to magnetic flux density. The device can be used for accurate position sensing in a wide range of applications.

The device operates from 3.0V to 5.5V power supplies. When no magnetic field is present, the analog output drives ½ of Vcc. The output changes linearly with the applied magnetic flux density, and four sensitivity options enable maximal output voltage swing based on the required sensing range. North and south magnetic poles produce unique voltages.

The MT910X family provides a variety of packages to customers. SOT-23 (Thin Outline) for surface mount and flat TO-92 for through-hole mount. All packages are RoHS compliant.

2 Features

- BCD Technology
- Factory-programmed
- Ratiometric Rail to Rail Analog Output
- Low-Noise Output
- 3.0~5.5V Operating Vcc Range
- -40℃~150℃ Operating Temperature
- Package Option:
  Flat TO-92
  SOT-23 (Thin Outline)
- Magnetic Sensitivity Option:
  1.50mV/Gs MT9101 Series @Vcc = 5V
  2.50mV/Gs MT9102 Series @Vcc = 5V
  3.40mV/Gs MT9103 Series @Vcc = 5V
  5.00mV/Gs MT9105 Series @Vcc = 5V
  1.00mV/Gs MT9101 Series @Vcc = 3.3V
  1.60mV/Gs MT9102 Series @Vcc = 3.3V
  2.15mV/Gs MT9103 Series @Vcc = 3.3V
  3.15mV/Gs MT9105 Series @Vcc = 3.3V
- RoHS Compliant: (EU)2015/863

3 Product Overview of MT910X

Part No.	Description
MT910XA	Flat TO-92, bulk packaging (1000pcs/bag)
MT910XET	SOT-23 (Thin Outline), tape & reel (3000pcs/bag)

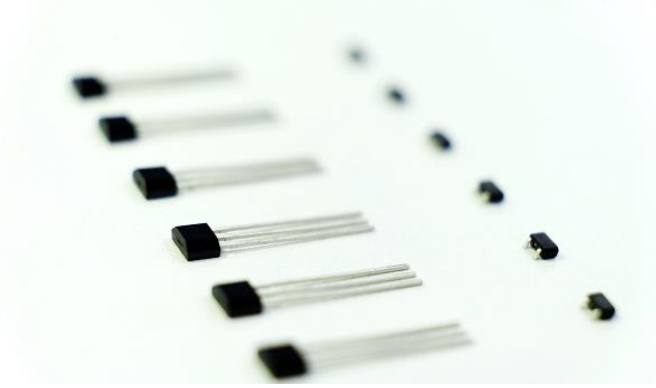

4 Applications

- Home appliances
- Industrial
- Speed Detection
- Position Detection
- Magnetic Encoder
- Ferrous Metal Sensing
- Vibration Sensing
- Weight Sensing

5. Pin Configuration and Functions

	Vcc	Out	GND
SOT-23 (Thin Outline)	1	2	3
Flat TO-92	1	3	2
Description	Power	Output	Ground

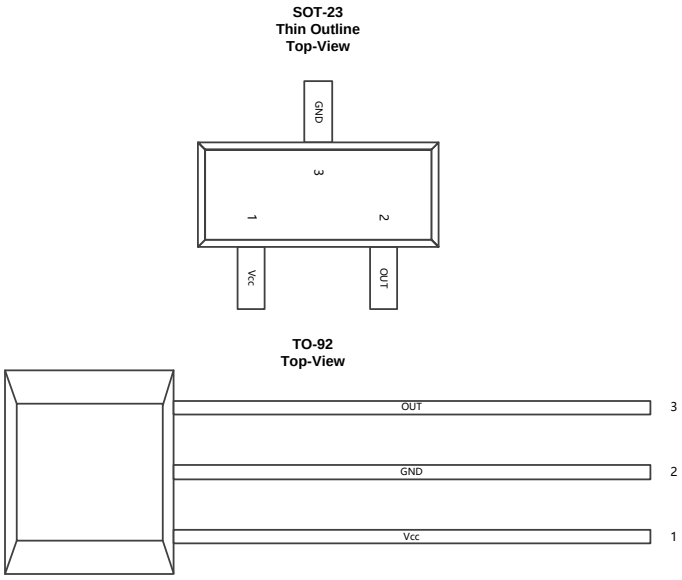

Figure.1 Pin Configuration & Functions

Table of Contents

1 Product Description....1
2 Features....1
3 Product Overview of MT910X....1
4 Applications....1
5 Pin Configuration and Functions....1
6 Transfer Characteristics....3
7 Function Description....3
8 Feature Description....3
9 Functional Block Diagram....4
10 Electrical and Magnetic Characteristics....4
10.1 Absolute Maximum Ratings....4
10.2 ESD Ratings....4
10.3 Electrical Specifications....5
10.4 Magnetic Characteristics....5
10.5 Characteristic Performance....6
11 Typical Application Circuit....8
12 Package Material Information....9
12.1 SOT-23 (Thin Outline) Package Information....9
12.2 Flat TO-92 Package Information....10
13 Copy Rights and Disclaimer....11

Reversion History

1	Originally Version	
2	Version 1.1	Update characteristic performance & Noise
3	Version 1.2	Update parameters @ 3.3V Vcc
4	Version 1.3	Update the marking spec of SOT-23 (Thin Outline)
5	Version 1.4	Update the drawing information of flat TO-92

6 Transfer Characteristics

Finure.2 shows four sensitivity options enable maximal output voltage swing based on the required sensing range

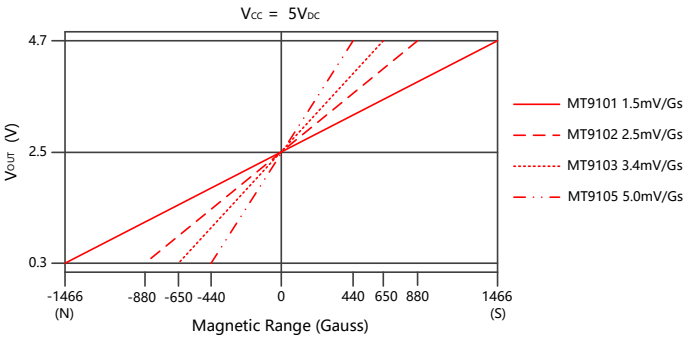

Figure.2 Transfer Characteristics (Vcc=5V)

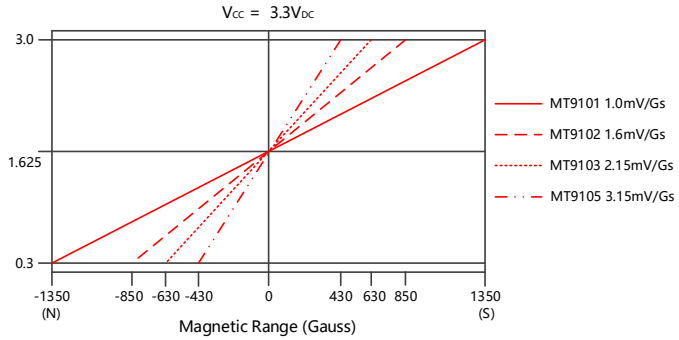

Figure.3 Transfer Characteristics (Vcc=3.3V)

7 Function Description

The device produces a linear response when the output voltage is within the specified voltage range. Outside this range, sensitivity is reduced and nonlinear

8 Feature Description

The MT910X device is sensitive to the magnetic field component that is perpendicular to the top of the package

When the magnetic field moving from the left side of the IC to the middle which showed in the left of the Figure.3, the VOUT changing from 0.3 to 2.5V linearity when VCC=5V

When the magnetic field located at the middle of the IC which showed in the middle of the Figure.3, the VOUT is 2.5V (1/2 of the VCC=5V)

When the magnetic field moving from the middle side of the IC to the right which showed in the right of the Figure.3, the VOUT changing from 2.5 to 4.7V linearity when VCC=5V

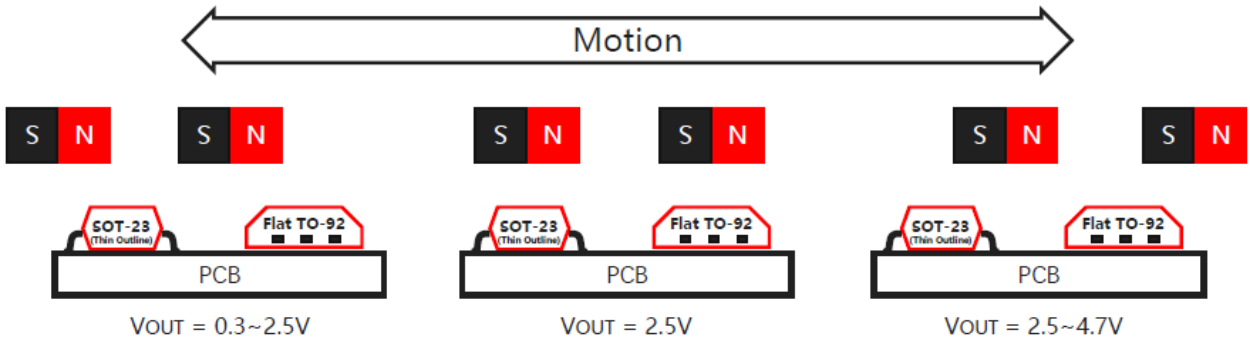

Figure.4 Feature Description

9 Functional Block Diagram

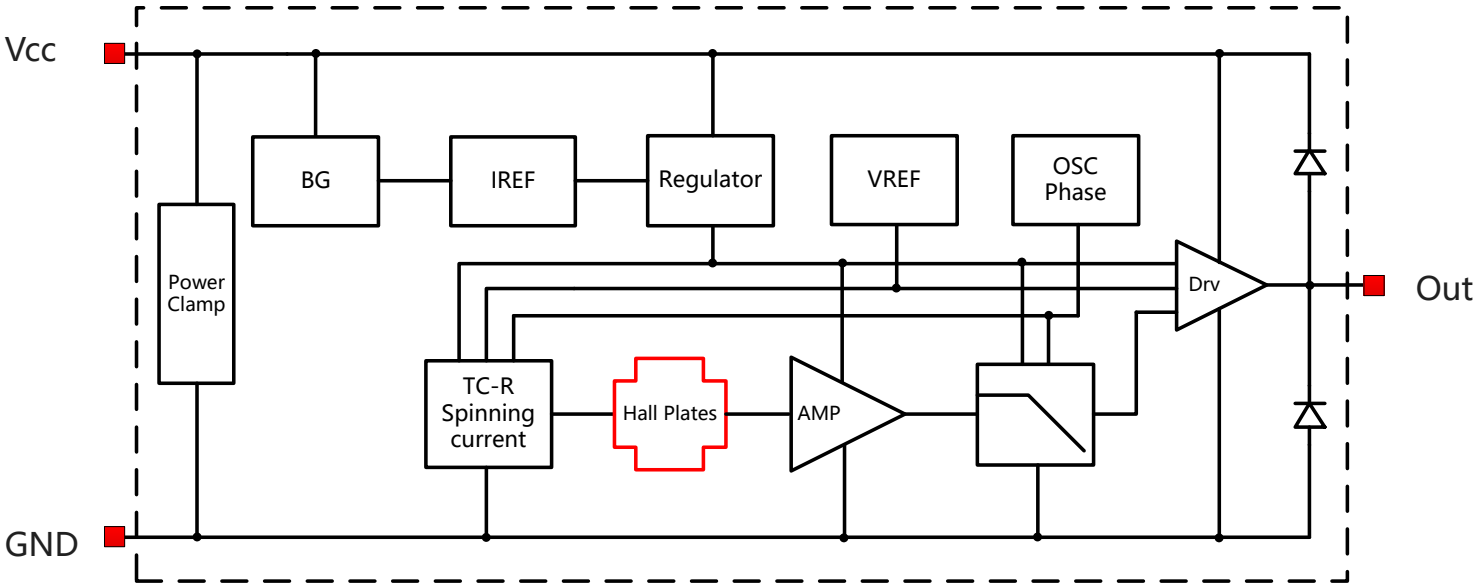

Figure.5 Functional Block Diagram

10 Electrical and Magnetic Characteristics

10.1 Absolute Maximum Ratings

Absolute maximum ratings are limited values to be applied individually, and beyond which the serviceability of the circuit may be impaired. Functional operability is not necessarily implied. Exposure to absolute maximum rating conditions for an extended period of time may affect device reliability.

Symbol	Parameters	Min	Max	Units
V_{CC}	Supply Voltage	-	30	V
V_{RCC}	Reverse Battery Voltage	-0.2	-	V
V_{OUT}	Output Voltage	-	30	V
I_{OUT}	Continuous Output Current	-5	5	mA
T_A	Operating Ambient Temperature	-40	150	℃
T_S	Storage Temperature	-40	160	℃
T_J	Junction Temperature	-	165	℃

10.2 ESD Ratings

Symbol		Reference	Values	Unit
V_{ESD}	Human-body model (HBM)	AEC-Q100-002	±3000	V
	Charged-device model (CDM)	AEC-Q100-011	±1000	V

10.3 Electrical Specifications

At T_A=-40~150 ℃, Vcc=3.0V~5.5V (unless otherwise specified)

Symbol	Parameters	Test Condition	Min	Typ	Max	Unit
V_{CC}	Supply Voltage		3.0	-	5.5	V
I_{CC}	Supply Current	V_{CC}=5V; B=0	-	6.7	8.6	mA
		V_{CC}=3.3V; B=0	-	6.0	7.0	mA
T_{PO}	Power on Time	$dV_{CC}/dt \geq 5V/us$	-	-	30	us
I_{SINK}	Sink Current	B=0; V_{OUT}=V_{CC}	-1.5	-	-	mA
I_{SOURCE}	Source Current	B=0; V_{OUT}=0	-	-	1.5	mA
B_W	Bandwidth		20	30	-	KHz
F_C	Chopper Frequency		-	780	-	KHz
N_F	Noise	B=0; T_A=25℃	-	1.9	2.6	mG/root(Hz)
		MT9101; T_A=25℃	-	1.46	-	mV_{RMS}
		MT9102; T_A=25℃	-	2.44	-	mV_{RMS}
		MT9103; T_A=25℃	-	3.32	-	mV_{RMS}
		MT9105; T_A=25℃	-	4.88	-	mV_{RMS}
R_{OUT}	Output Resistance	I_{OUT}<=±1.5mA V_{OUT}=2.5V	-	2	4	Ohm
R_L	Output Loading Resistance	I_{OUT}<=1.5mA Output to GND or to V_{CC}	4.7	-	-	Kohm
C_L	Output Loading Capacitance	I_{OUT}<=±1.5mA Output to GND	-	-	10	nF
R_{TH}	Thermal Resistance of SOT-23 (Thin outline)		-	301	-	℃/W
	Thermal Resistance of Flat TO-92		-	230	-	℃/W

10.4 Magnetic Characteristics

At T_A=-40~150 ℃, Vcc=3.0V~5.5V (unless otherwise specified)

Symbol	Parameters	Test Condition	Min	Typ	Max	Unit
L_{IN}	Linearity		-1.5	-	1.5	%
V_{NULL}	Quiescent Voltage	V_{CC}=5V; B=0 T_A=25℃	2.475	2.500	2.525	V
		V_{CC}=3.3V; B=0 T_A=25℃	1.630	1.650	1.670	V
V_{NULL} (V)	Ratiometry, V_{NULL}	Vcc=4.5V~5.5V	-1.5	-	1.5	%
V_{NULL} (T)	V_{NULL} Variation Over Temperature	Vcc=4.5V~5.5V	-1.5	-	1.5	%
S_{ENS} (T)	S_{ENS} Variation Over Temperature		-10	-	10	%

10.4 Magnetic Characteristics (continued)

At T_A=-40~150 ℃, Vcc=3.0V~5.5V (unless otherwise specified)

Symbol	Parameters	Test Condition	Min	Typ	Max	Unit
SENS	Sensitivity T_A=25℃; Vcc=5V	MT9101	1.395	1.500	1.605	mV/Gs
		MT9102	2.325	2.500	2.675	mV/Gs
		MT9103	3.162	3.400	3.638	mV/Gs
		MT9105	4.650	5.000	5.350	mV/Gs
	Sensitivity T_A=25℃; Vcc=3.3V	MT9101	0.900	1.000	1.100	mV/Gs
		MT9102	1.488	1.600	1.712	mV/Gs
		MT9103	2.000	2.150	2.300	mV/Gs
		MT9105	2.930	3.150	3.370	mV/Gs
B	Magnetic Field Range T_A=25℃; Vcc=5V	MT9101	-	±1466	-	Gs
		MT9102	-	±880	-	Gs
		MT9103	-	±650	-	Gs
		MT9105	-	±440	-	Gs
	Magnetic Field Range T_A=25℃; Vcc=3.3V	MT9101	-	±1350	-	Gs
		MT9102	-	±850	-	Gs
		MT9103	-	±630	-	Gs
		MT9105	-	±430	-	Gs

10.5 Characteristic Performance

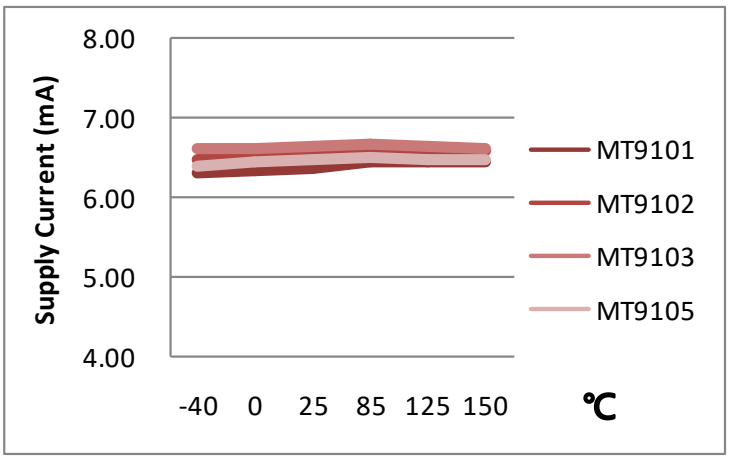

Figure.6 Supply Current vs. Temperature (At Vcc=5.0V)

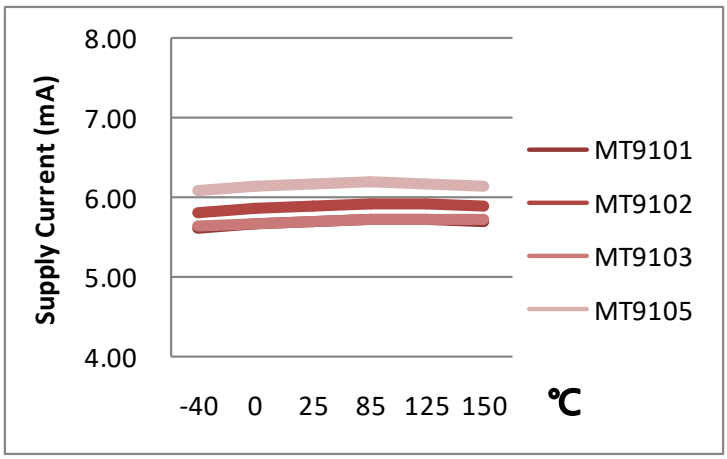

Figure.7 Supply Current vs. Temperature (At Vcc=3.3V)

10.5 Characteristic Performance (continued)

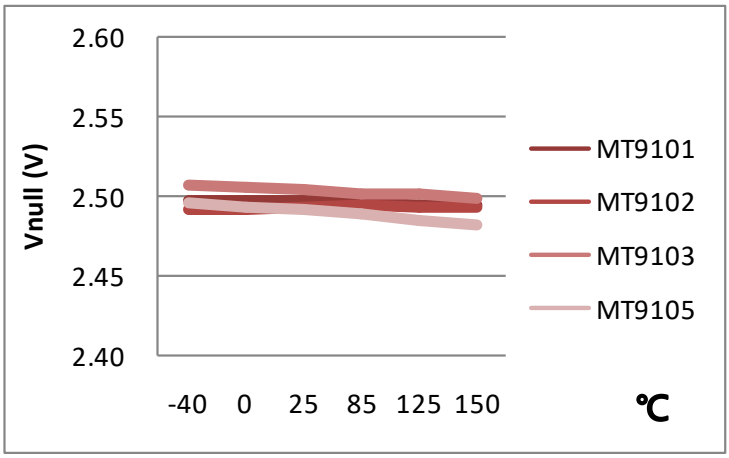

Figure.8 Vnull vs. Temperature (At Vcc=5.0V)

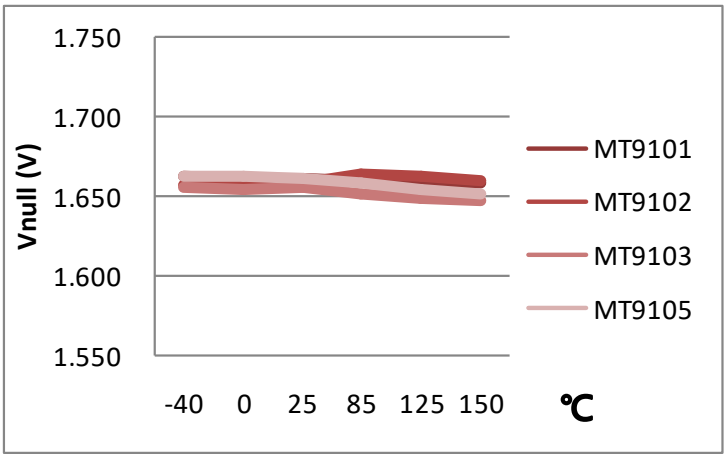

Figure.9 Vnull vs. Temperature (At Vcc=3.3V)

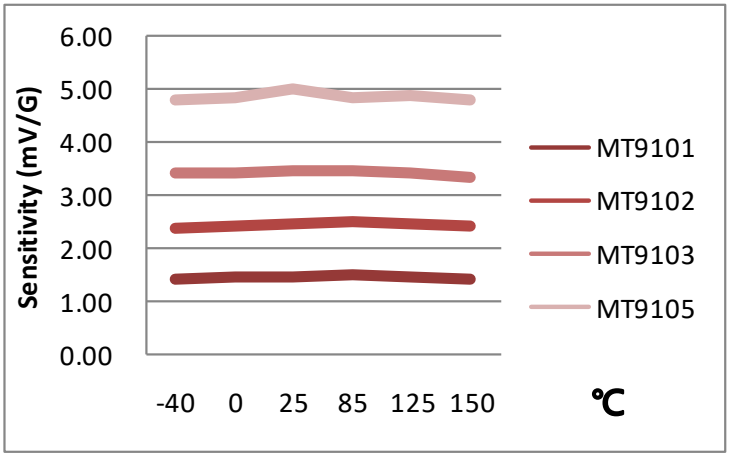

Figure.10 Sensitivity vs. Temperature (At Vcc=5.0V)

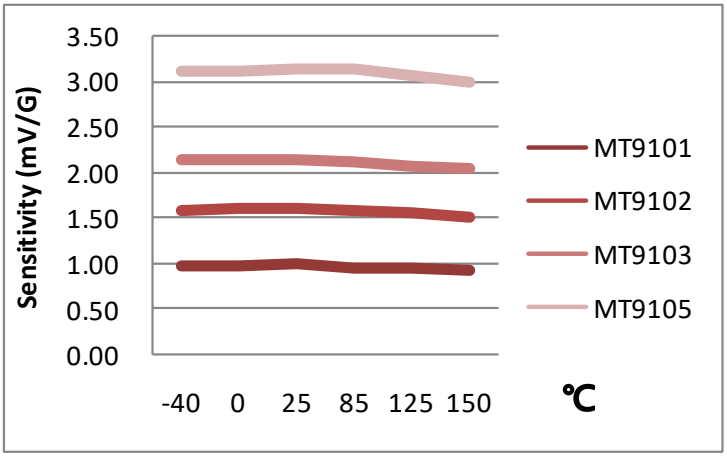

Figure.11 Sensitivity vs. Temperature (At Vcc=3.3V)

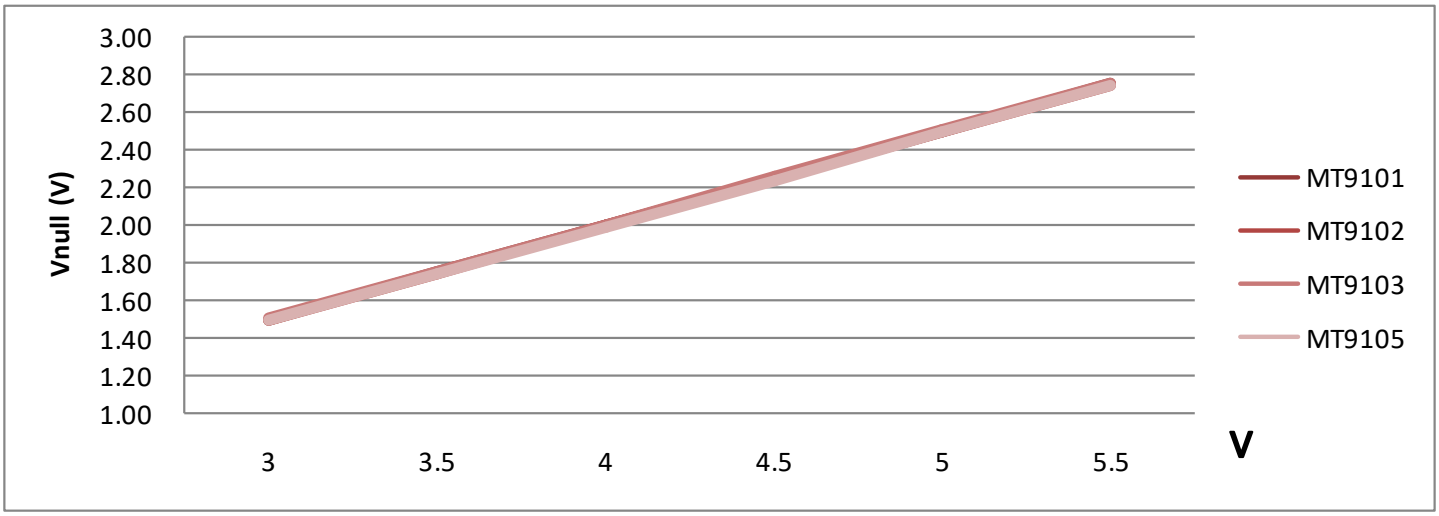

Figure.12 VNULL vs. Vcc (At B=0Gs; TA=25℃)

10.5 Characteristic Performance (continued)

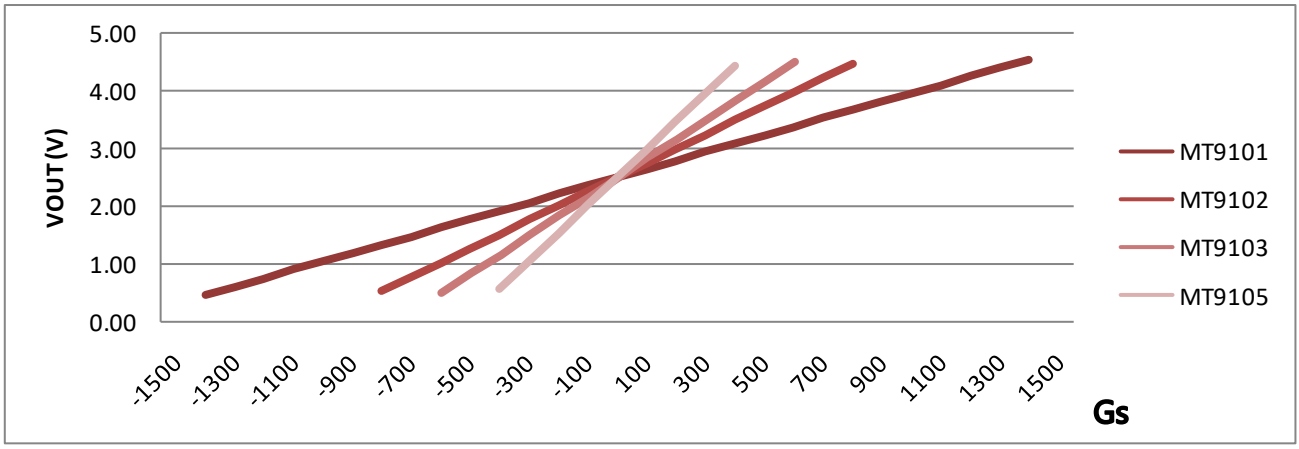

Figure.13 V_{OUT} vs. Magnetic Field (At V_{CC}=5.0V; T_A=25℃)

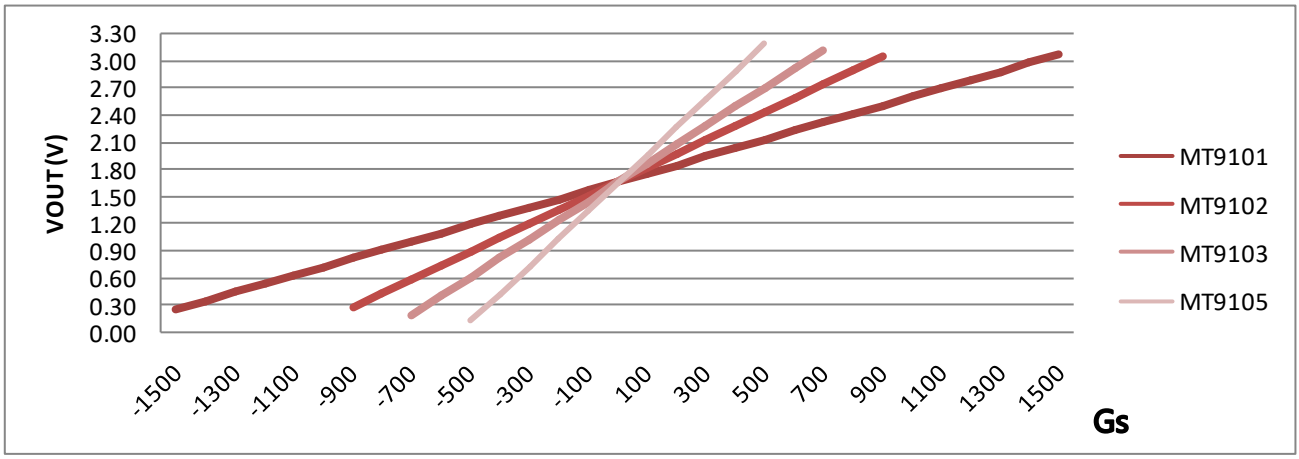

Figure.14 V_{OUT} vs. Magnetic Field (At V_{CC}=3.3V; T_A=25℃)

11 Typical Application Circuit

MT9101ET as example

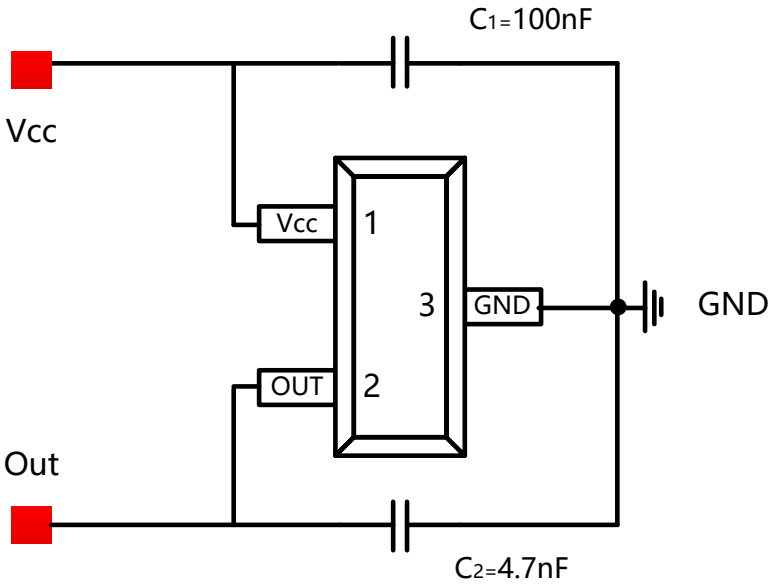

Figure.15 Typical Application Circuit

12 Package Material Information (For Reference Only – Not for Tooling Use)

12.1 SOT-23 (Thin Outline) Package Information

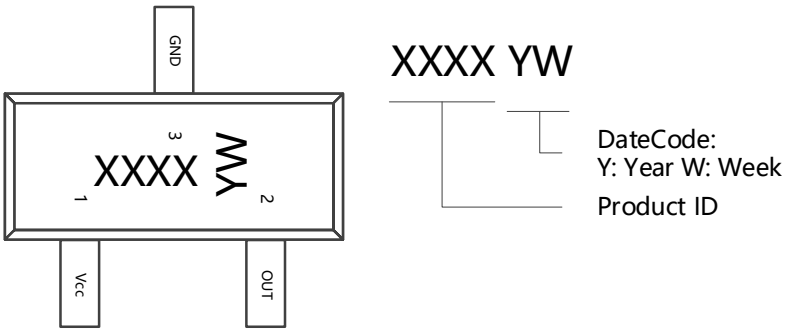

Figure.16 SOT-23 (Thin Outline) Chip Marking Spec

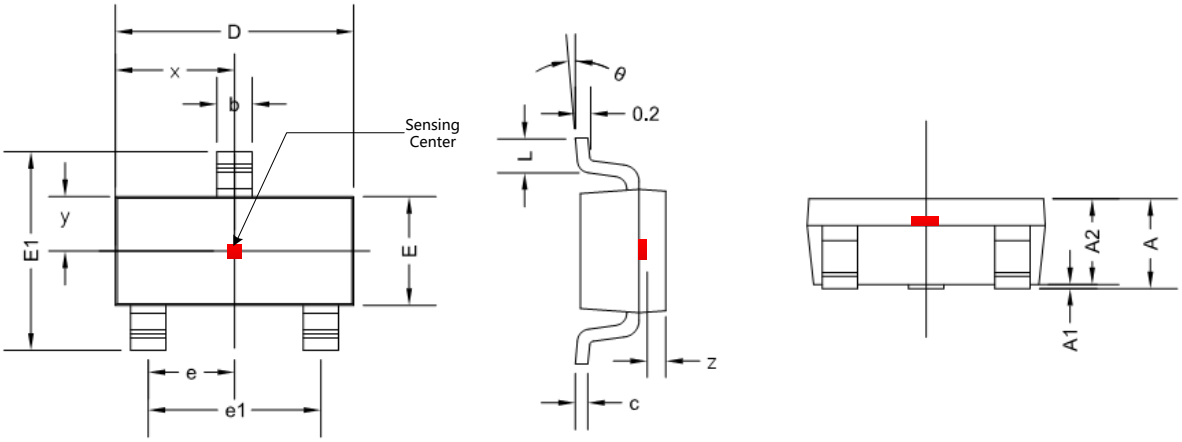

Figure.17 SOT-23 (Thin Outline) Package Drawing

Symbol	Dimensions in Millimeters		Dimensions in Inches	
	Min	Max	Min	Max
A	0.900	1.150	0.035	0.045
A1	0.000	0.100	0.000	0.004
A2	0.900	1.050	0.035	0.041
b	0.300	0.500	0.012	0.020
c	0.080	0.150	0.003	0.006
D	2.800	3.000	0.110	0.118
E	1.200	1.400	0.047	0.055
E1	2.250	2.550	0.089	0.100
e	0.950 TYP		0.037 TYP	
e1	1.800	2.000	0.071	0.079
L	0.550 REF		0.022 REF	
L1	0.300	0.500	0.012	0.020
θ	0 °	8 °	0 °	8 °
x	1.460 TYP		0.057 TYP	
y	0.650 TYP		0.026 TYP	
z	0.500 TYP		0.020 TYP	

12.2 Flat TO-92 Package Information

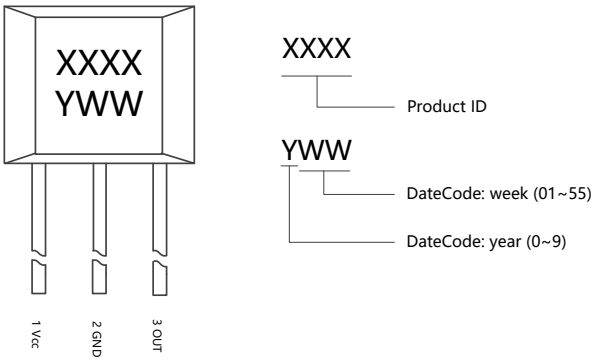

Figure.18 Flat TO-92 Chip Marking Spec

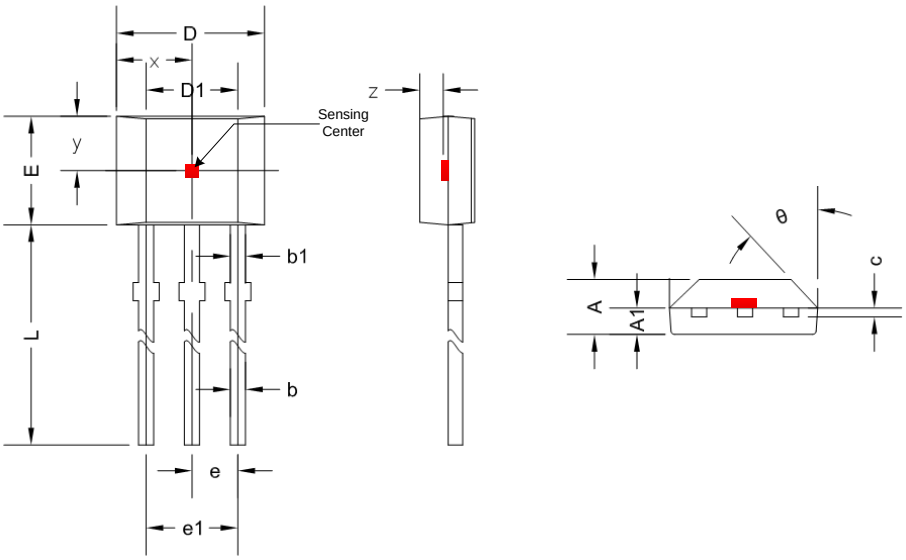

Figure.19 Flat TO-92 Package Drawing

Symbol	Dimensions in Millimeters		Dimensions in Inches	
	Min	Max	Min	Max
A	1.420	1.620	0.056	0.064
A1	0.660	0.860	0.026	0.034
b	0.330	0.430	0.013	0.017
b1	0.330	0.430	0.013	0.017
c	0.330	0.510	0.013	0.020
D	3.900	4.100	0.154	0.161
D1	2.280	2.680	0.090	0.106
E	3.050	3.250	0.120	0.128
e	1.270 TYP		0.050 TYP	
e1	2.440	2.640	0.096	0.104
L	14.350	14.750	0.564	0.580
θ	45 ° TYP		45 ° TYP	
x	2.025 TYP		0.080 TYP	
y	1.545 TYP		0.061 TYP	
z	0.500 TYP		0.020 TYP	

13 Copy Rights and Disclaimer

1. This document may not be reproduced or duplicated, in any form, in whole or in part without prior written consent of MagnTek . Copyrights © 2019, MagnTek Incorporated.

2. MagnTek reserves the right to make changes to the information published in this document at anytime without notice.

3. MagnTek' s products are limited for use in normal commercial applications. MagnTek' s products are not to be used in any device or system, including but not limited to medical life support equipment and system.

For the latest version of this document, please visit our website: www.magntek.com.cn